KX-CF4001N3

4MP Lite Full-color Bullet Network

- 4MP, 1/3" CMOS image sensor, low illuminance, high image definition
- Outputs 4MP (2560 × 1440) @ 25/30 fps, 4MP (2688 × 1520) @ 20 fps
- Built-in warm lights, max. illumination distance: 30 m
- ROI, SMART H.264+/H.265+, flexible coding
- WDR, 3D DNR, HLC, BLC,
- Intelligent detection: Intrusion, tripwire
- Abnormality detection: Motion detection, video tampering, scene changing, no SD card, SD card full, SD card error, network disconnection, IP conflict, illegal access, voltage detection
- Built-in Mic
- Supports max. 256 GB Micro SD card
- 12V DC/PoE power supply
- IP67 protection

Camera	
Image Sensor	1/3”4Megapixel progressive CMOS
Max. Resolution	2688 (H) × 1520 (V)
ROM	128 MB
RAM	128 MB
Scanning System	Progressive
Electronic Shutter Speed	Auto/Manual 1/3 s–1/100,000 s
Minimum Illumination	0.004 Lux@F1.0
S/N Ratio	> 56 dB
Illumination Distance	30 m (98.4 ft)
Illuminator On/Off Control	Auto/Manual
Illuminator Number	1 (Warm light)
Pan/Tilt/Rotation Range	Pan: 0°–360° Tilt: 0°–90° Rotation: 0°–360°
Lens	
Lens Type	Fixed-focal
Mount Type	ϕ14
Focal Length	2.8 mm 3.6 mm
Max. Aperture	2.8 mm: F1.0 3.6 mm: F1.0
Field of View	2.8 mm: 96° (Horizontal) × 51° (Vertical) × 115° (Diagonal) 3.6 mm: 81° (Horizontal) × 44° (Vertical) × 97° (Diagonal)
Iris Type	Fixed
Close Focus Distance	2.8 mm: 1.3 m (4.3 ft) 3.6 mm: 1.8 m (5.9 ft)

DORI Distance	Lens	Detect	Observe	Recognize	Identify
	2.8mm	56.0 m (183.7 ft)	22.4 m (73.5 ft)	11.2 m (36.7 ft)	5.6 m (17.1 ft)
	3.6mm	72.0 m (236.2 ft)	28.8 m (94.5 ft)	14.4 m (47.2 ft)	7.2 m (23.6 ft)
Smart event					
General IVS Analytics	Tripwire; intrusion				
Video					
Video Compression	H.265; H.264; H.264B; MJPEG (only supported by the sub stream)				
Smart Codec	Smart H.265+/ Smart H.264+				
Video Frame Rate	Main stream: 2688 × 1520 (1 fps–25/30 fps) 2560 × 1440 (1 fps–25/30 fps) Sub stream: 704 × 576 (1 fps–20/25 fps) 704 × 480 (1 fps–20/30 fps)				
Stream Capability	2 streams				
Resolution	2688 × 1520 (2688 × 1520); 2560 × 1440 (2560 × 1440); 2304 × 1296 (2304 × 1296); 1080p (1920 × 1080); 1.3M (1280 × 960); 720p (1280 × 720); D1 (704 × 576/704 × 480); VGA (640 × 480); CIF (352 × 288/352 × 240)				
Bit Rate Control	CBR/VBR				
Video Bit Rate	H.264: 32 kbps–6144 kbps H.265: 12 kbps–6144 kbps				
Day/Night	Color/B/W				
BLC	Yes				
HLC	Yes				
WDR	120 dB				
White Balance	Auto/natural/street lamp/outdoor/manual/regional custom				
Gain Control	Auto/Manual				
Noise Reduction	3D DNR				

KX-CF4001N3

4MP Lite Full-color Bullet Network

Motion Detection	OFF/ON (4 areas, rectangular)
Region of Interest(RoI)	Yes (4 areas)
Smart Illumination	Yes
Image Rotation	0°/90°/180°/270° (Support 90°/270° with 2688×1520 resolution and lower.)
Mirror	Yes
Privacy Masking	4 areas
Audio	
Built-in MIC	Yes
Audio Compression	G.711A; G.711Mu; G.726; AAC
Alarm	
Alarm Event	No SD card; SD card full; SD card error; network disconnection; IP conflict; motion detection; video tampering; tripwire; intrusion; illegal access; voltage detection; audio detection; safety exception
Network	
Network	RJ-45 (10/100 Base-T)
SDK and API	Yes
Protocol	HTTP; TCP; ARP; RTSP; RTP; UDP; RTCP; SMTP; FTP; DHCP; DNS; DDNS; PPPoE; IPv4/v6; QoS; UPnP; NTP; RTMP; Multicast; HTTPS; SFTP; 802.1x; ICMP; IGMP; Bonjour
Interoperability	ONVIF (Profile S/Profile G/Profile T); CGI; P2P; Milestone; Genetec
User/Host	20 (Total bandwidth: 72 M.)
Storage	KBVISION Cloud; FTP; Micro SD card (support max. 256 G); NAS; SFTP
Browser	IE Chrome Firefox
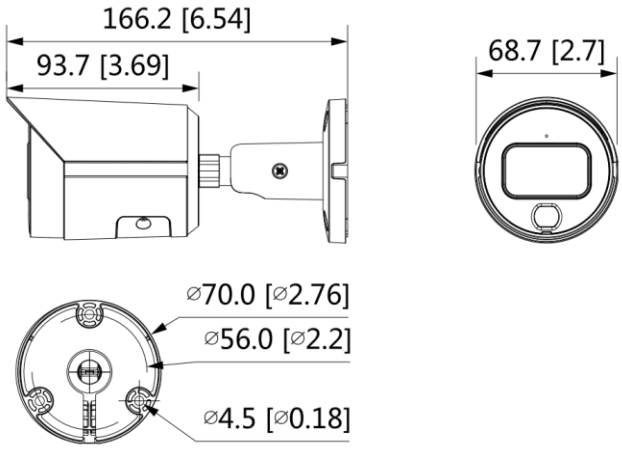
Management Software	KBiVMS, KBiVMS Pro, KBView, KBView Plus
Mobile Phone	IOS; Android
Power	
Power Supply	12V DC/PoE (802.3af)
Power Consumption	< 6.2W
Environment	
Operating Conditions	-40°C to +60°C (-40°F to +140°F)/less than ≤ 95% RH
Storage Temperature	-40°C to +60°C (-40°F to +140°F)
Protection Grade	IP67
Structure	
Casing	metal
Dimensions	100.9 mm × Φ109.9 mm (4.0" × Φ4.3")
Net Weight	0.365 kg (0.8 lb)
Gross Weight	0.527 kg (1.2 lb)
Dimensions (mm[inch])